1. Mechanical Dimensions:

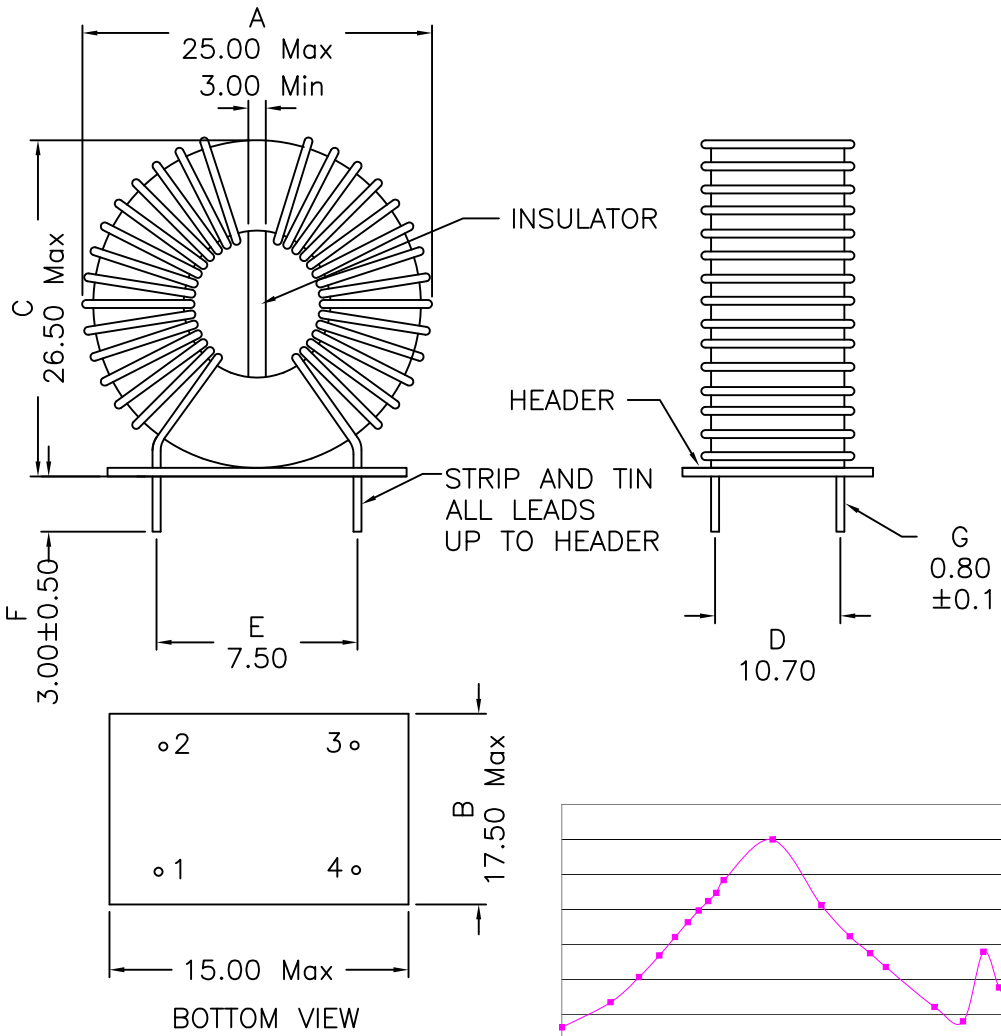

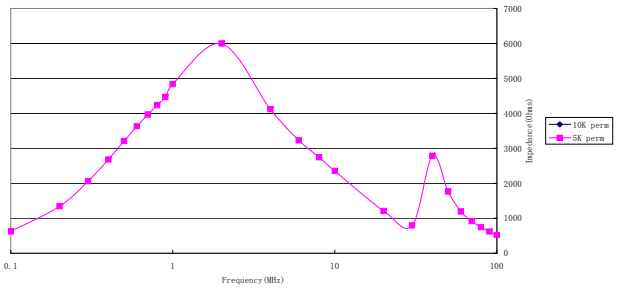

2. Schematic:

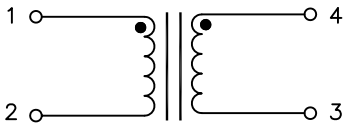

3. Electrical Specifications:

OCL: 1.0mH±30%@10KHz 0.1V, Each Wdg
0.3mH Min @10KHz 0.1V, Each Wdg,−40°C

Q: Pin1−2 70 Min @10KHz 0.1V

Rated Voltage: 250VAC

DCR: 20mOhms Max, Each Wdg

Current Rating: 6Aac

Hipot: 2000Vac, Wdg to Wdg

Notes:

1. Solderability: Leads shall meet MIL−STD−202G, Method 208H for solderability.
2. Flammability: UL94V−0
3. ASTM oxygen index: > 28%
4. Insulation System: Class F 155°C. UL file E151556
5. All listed parameters are to be within tolerance from −40°C to +85°C unless otherwise
6. Storage Temperature Range: −55°C to +125°C
7. Aqueous wash compatible
8. Electrical and mechanical specifications 100% tested
9. RoHS Compliant Component

XFMRS Inc www.XFMRS.com	Title: COMMON MODE CHOKE		
UNLESS OTHERWISE SPECIFIED TOLERANCES: .xx ±0.25 Dimensions in MM	P/N: XF0013−VMCMC3		REV. A
	DWN.	Xianyi	Sep−03−08
	CHK.	YK Liao	Sep−03−08
SHEET 1 OF 1	APP.	Joe Huff	Sep−03−08

DOC REV: A/2

PROPRIETARY Document is the property of XFMRS Group & is not allowed to be duplicated without authorization.