1. Mechanical Dimensions:

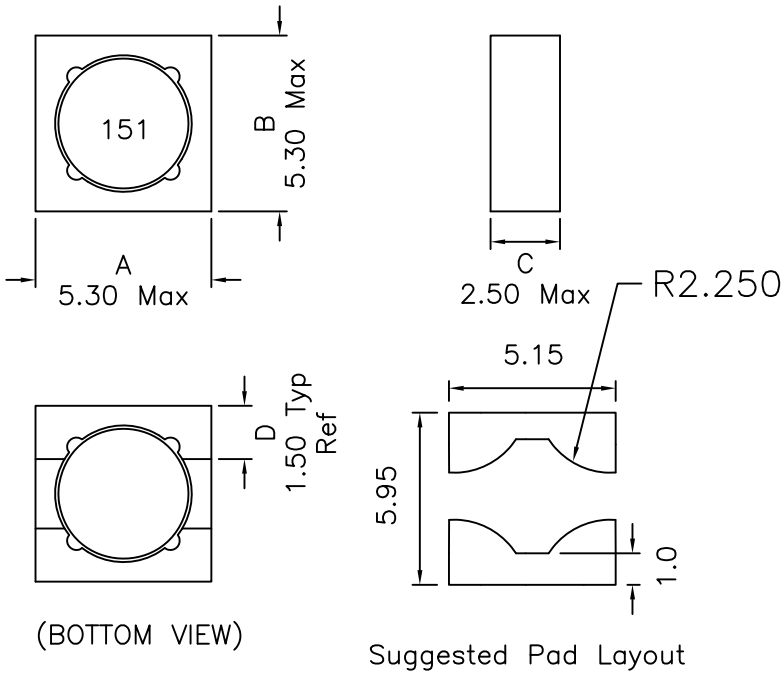

2. Schematic:

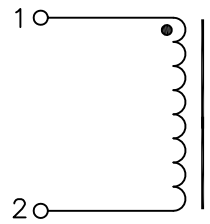

3. Electrical Specifications: @25°c

OCL: 150uH±20% @100KHz 0.25V

Q: tbd Min @100KHz 0.25V

DCR: 0.8723 Ohms Typ

Irms: 0.553A (Based on 40°C Rise in Temp)

Isat: 0.328Adc (Based on 30% drop in OCL)

PRELIMINARY

Notes:

1. Solderability: Leads shall meet MIL-STD-202G, Method 208H for solderability.
2. Flammability: UL94V-0
3. ASTM oxygen index: > 28%
4. Insulation System: Class F 155°C. UL file E151556
5. Operating Temperature Range: All listed parameters are to be within tolerance from -40°C to +85°C
6. Storage Temperature Range: -55°C to +125°C
7. Aqueous wash compatible
8. SMD Lead Coplanarity: ±0.004"(0.102mm)
9. Electrical and mechanical specifications 100% tested
10. RoHS Compliant Component
11. Outsourced item processed & controlled under XFMRS QA system

DOC. REV: A/-

PROPRIETARY Document is the property of XFMRS Group & is not allowed to be duplicated without authorization.

XFMRS Inc www.XFMRS.com	Title: SMD Inductor		
UNLESS OTHERWISE SPECIFIED TOLERANCES: .xx ±0.30 Dimensions in MM	P/N: XFTPRH52D25-151M		REV. A
	DWN.	Yuan	Jan-02-13
	CHK.	YK Liao	Jan-02-13
SHEET 1 OF 1	APP.	BW	Jan-02-13